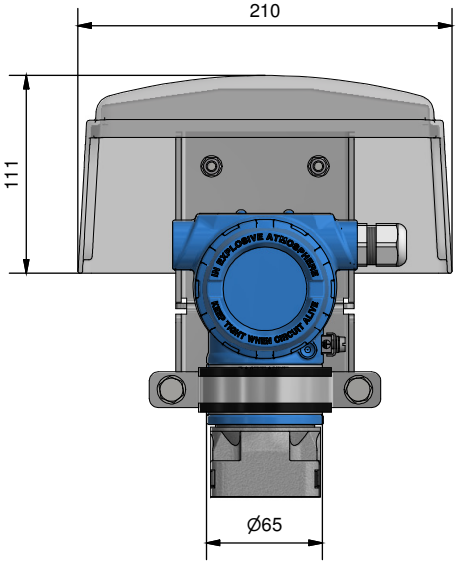

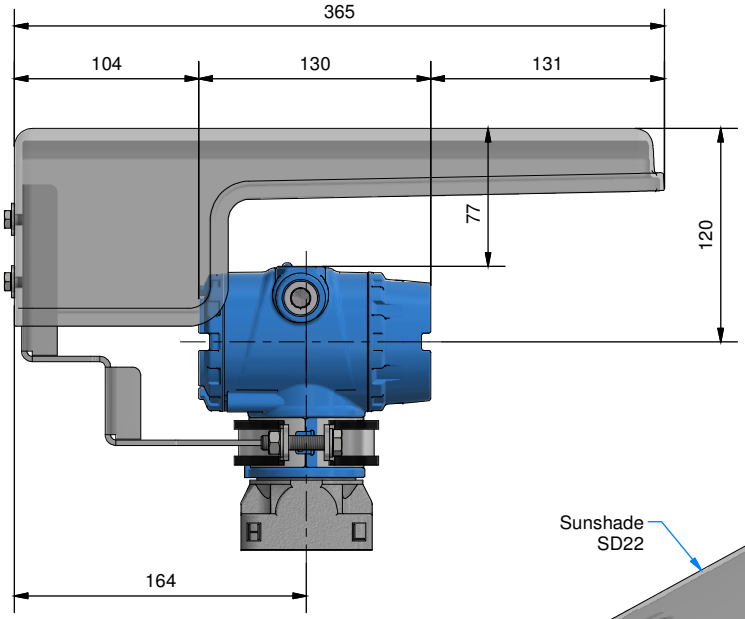

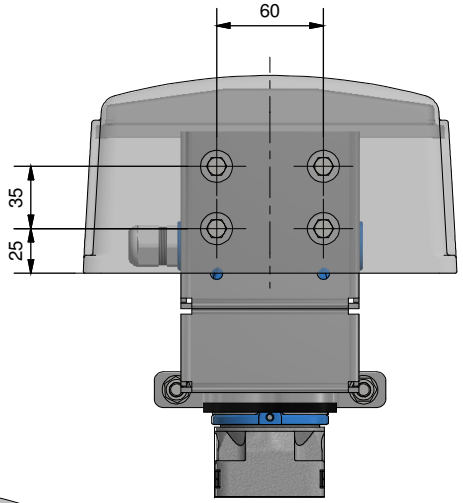

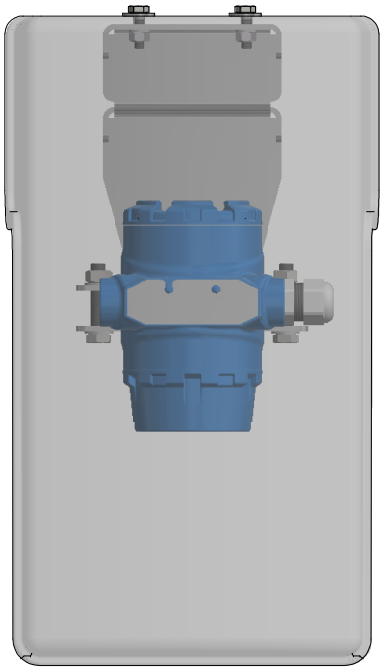

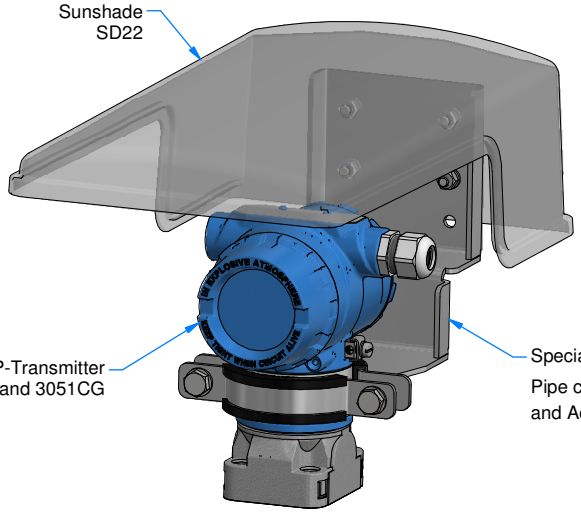

Mounting position:
Transmitter 3051CD and 3051CG vertical

INTERTEC-Hess GmbH
Raffineriestraße 8
D-93333 Neustadt / Donau
Pho.: +49(0)9445/9532-0
www.intertec.info

Status:	Scale:	Customer:
Order	1:3	

	Date	Name
designed by	24.06.2020	Siebenhaar
checked by	24.06.2020	Forstner

Description:
Sunshade-SD22-Installation
Type:
for Rosemount 3051SMV, 3051CD and 3051CG

Drawing No.:
KFCC-X1

Sheet: 4
of: 4
Size: A3

Edition	Modifikation	Date	Name

This drawing is the property of INTERTEC-Hess GmbH. It shall not be copied or submitted to outside parties without our written consent.
All dimension tolerances are according to ISO 2768-medium unless otherwise specified. Test dimensions for internal use only.